SD/MMC CARD READER CONNECTOR (MMC)

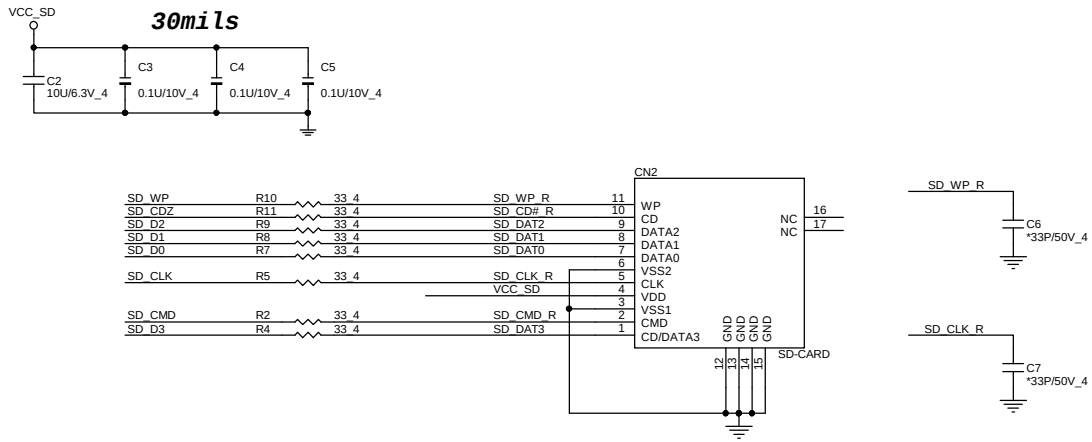

USB2.0

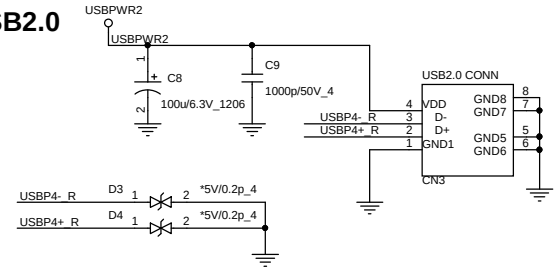

01

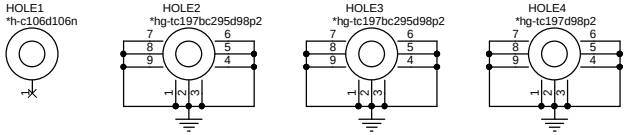

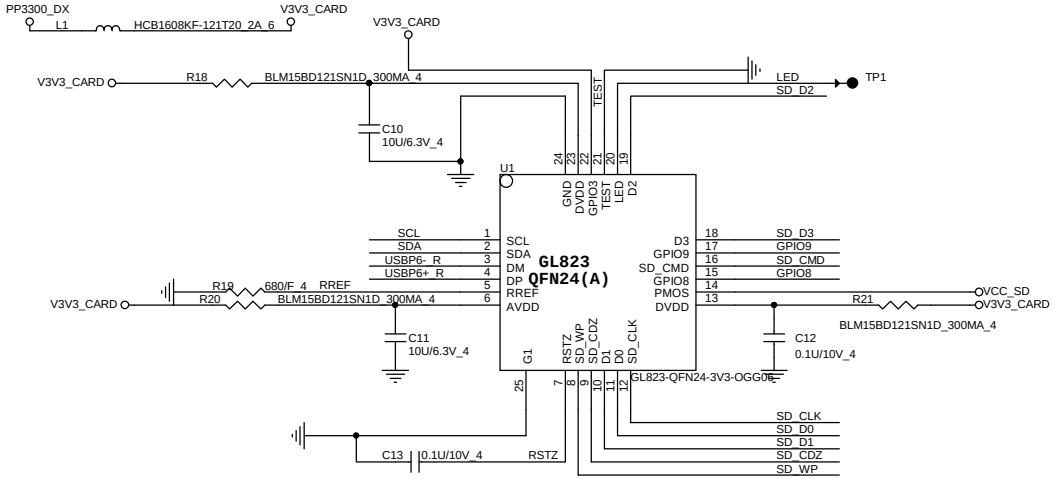

GPIO8	GPIO9	FUNCTION
NC	NC	Default Configuration
NC	GND	Remote wake up enable
GND	NC	Power saving enable
GND	GND	ESD mode enable

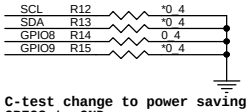

C-test change to power saving mode GPIO8 to GND

Application Note

SCL	FUNCTION
NC	Default "Generic STORAGE DEVICE" String
GND	"USB Flash Disk" String

SDA	FUNCTION
NC	Default Support Serial Number
GND	Non Support Serial Number

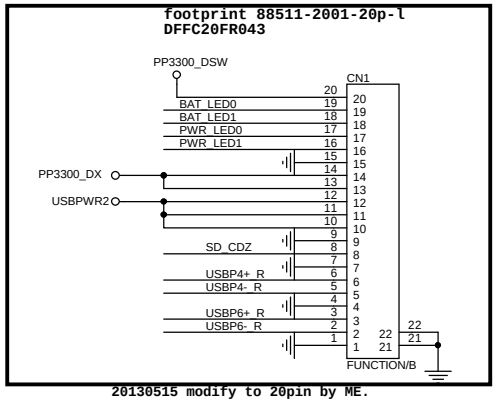

20130515 modify to 20pin by ME.

LED/B

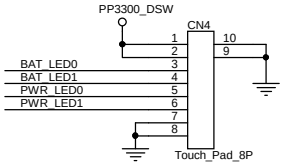

Quanta Computer Inc.

PROJECT : Chrome

Size	Document Number	Rev
	GL823L-cardreader	1A

Date: Friday, May 31, 2013 Sheet 1 of 1

WWW.AliSaler.Com